INDUSTRY ENGAGEMENT STRATEGY

Document number ..... SKA-IES
Revision 5.5
Author ..... P. Crosby
Date 2017-02-06
Status ..... Final

Document Owner	Designation	Affiliation	Date	Signature
Submitted by:				
P Crosby	Industry Liaison Officer	SKA Organisation	2017-02-06	Phil Crosby
Approved by:				

DOCUMENT HISTORY

Revision	Date Of Issue	Engineering Change Number	Comments
1.0 – 2.3	25/06/10 – 28/11/11	-	First release version and subsequent versions to Nov 2011
3.0	08/04/2012	-	General update to reflect start of PEP phase and processes, formation of The SKA Organisation, and recent SPO announcements and directions. Mainly sections 3 & 9.
4.0	25 May 2012	-	Complete revision to reflect current policy status
4.1	30 May 2012	-	Minor revisions suggested by KC
4.2	05 June 2012	-	Revisions from MvH
4.3	07 June 2012	-	Revisions from author team (MvH, PC, KC)
4.4	12 Mar 2014	-	Update to reflect current project view
5.0	11/02/2015	-	Full update to reflect current approach
5.1	12/02/2015	-	Update abbreviations, definitions, and role of ACP
5.2	13/02/2015	-	S. Berry edits
5.3	10/04/2015	-	MWA precursor now mentioned in Section 3
5.4	07/09/2015	-	Correct typo in Table 1.
5.5	06/02/2017	-	General update

DOCUMENT SOFTWARE

	Package	Version	Filename
Word processor	MsWord	Word 2007	IES_V5-5 docx

ORGANISATION DETAILS

Name	SKA Organisation
Registered Address	Jodrell Bank Observatory Lower Withington Macclesfield Cheshire, SK11 9DL, UK Registered in England & Wales Company Number: 07881918
Fax.	+44 (0)161 306 9600
Website	www.skatelescope.org

TABLE OF CONTENTS

1 DEFINITIONS 5
2 INTRODUCTION AND PURPOSE OF THIS DOCUMENT 6
3 THE SQUARE KILOMETRE ARRAY (SKA) PROJECT 7
4 THE SKA ORGANISATION, MEMBERSHIP, AND THE SKA OFFICE 8
5 INDUSTRY INVOLVEMENT PROFILE 9
5.1 Supplier profile 11
6 BROADER BENEFITS OF ENGAGEMENT WITH THE SKA PROJECT 12
7 ASSUMPTIONS, FRAMEWORK, AND PRINCIPLES OF INDUSTRY ENGAGEMENT 12
8 ASSUMPTIONS, PRINCIPLES, AND PROCESS FOR PROCUREMENT 14
8.1 Introduction to SKA procurement 15
8.2 Return on Investment and *Fair Work Return* 15
8.3 Process outline 16
8.4 Evaluation of offers 18
9 COMMUNICATION OF OPPORTUNITIES FOR THE OVERALL SKA PROJECT 18
10 INTELLECTUAL PROPERTY 19
11 INDUSTRY ENGAGEMENT RISK MANAGEMENT 19
APPENDIX A – INDICATIVE TIME-CHART FOR THE SKA PROJECT 20

LIST OF FIGURES

Figure 1: The SKA Organisation governance structure. 9
Figure 2: Areas of potential industry opportunity in relation to the SKA signal path. 10
Figure 3: Pathways for industry contracting to occur. 16
Figure 4: The relationships between the SKA Office, WPC, and Industry. 17

LIST OF TABLES

Table 1: Top level project timeline (indicative) for the SKA 8
Table 2: SKA Domains with potential for industry involvement 10

LIST OF ABREVIATIONS

ACP.....Authorised Contact Person
CFT.....Call for Tender
CSIRO…….The Commonwealth Scientific and Industrial Research organisation
EoI .....Expression of Interest
EU.....European Union
ICT.....Information and Communications Technology
IES.....Industry Engagement Strategy
IP .....Intellectual property
ITO..... International Treaty Organisation
MLA .....Multilateral Agreement
MRO.....Murchison Radio astronomy Observatory
MWA……Murchison Widefield Array
PEP.....Project Execution Plan
R & D .....Research and Development
RFI.....Radio Frequency Interference
RfP .....Request for proposal
RfQ .....Request for Quotation
RoI.....Return on Investment
SKA .....Square Kilometre Array
SME.....Small and Medium (sized) Enterprises
SoMI .....Statement of Mutual Interest
SPDO .....SKA Program Development Office
WPC .....Work package Consortium

1 Definitions

Authorised Contact Person (ACP)	A person officially nominated by a Member country as their approved representative in matters concerning Member country industry capability, local industry consortia, national trade frameworks, and innovation networks. The ACP is also responsible for local coordination of any SKAO assessment of the member country capability e.g. industry capability audit.
ALMA	The Atacama Large Millimetre/submillimeter Array.
ASKAP	The Australian SKA Pathfinder telescope.
Industry	The collection of various public and private companies ranging from large multi-nationals to small and medium enterprises (SMEs), research firms, industry associations and consortia, and other groups or individuals with an interest in provisioning the SKA program in some way.
In-Kind contribution	A non-cash input which can be given a cash equivalent value, and consisting of goods or services, time or expertise.
Fair Work Return	The principle that the value of contracts awarded to firms from a given member country is in proportion (but not necessarily equal) to the funding that country has contributed. Fair work return may include non-financial returns to a member.
LOFAR	The Low Frequency Array (built in the Netherlands).
MeerKAT	The (South African) Karoo Array Telescope.
Participating Organisations	Institutes or Agencies of SKA Member countries that are actively involved in supporting the realisation of the SKA telescope, largely through participation in Work Packages.
Pathfinder	SKA-related technology or science and operations activity.
Precursor	A telescope on one of the two SKA candidate sites, carrying out SKA-related activity.
SKA Associate Member	A non-voting membership category
SKA Members (or SKA member countries)	Instead of shareholders, the Members of the SKA Organisation are the guarantors (with limited liability). The Directors of the Board are appointed by the Members.
SKA Organisation	A private UK company limited by guarantee, formed to manage and execute the SKA project.
SKA stakeholders	The SKA organisation and its Members, funding agencies, member country Governments, participating organisations, suppliers, telescope users, and external interested parties e.g. indigenous/traditional land owners.
Work Package Consortia	Collaborative groups (possibly including industry participants) led by an organisation(s) from Member country, formed for the purpose of responding to SKA Work Package opportunities.

2 Introduction and Purpose of this Document

This document describes the principles, framework, and anticipated arrangements for industrial engagement and procurement with the Square Kilometre Array (SKA) project. It aims to provide guidance to industry and other stakeholders to assist practical participation.

The international SKA project aims to construct the world's largest radio telescope – around 50 times more sensitive than present instruments – by around 2025, with Phase 1 science commencing in 2020. The current detailed design phase (pre-construction) between 2013 and 2017 will see a 'down-select' of technologies for the first construction stage – SKA_1.

The scale of the SKA, and the inherent requirement to 'productise' and mass-produce many of its components, requires new and innovative levels of industry participation, beyond that experienced in other radio-astronomy projects such as the ALMA instrument in Chile, the International LOFAR Telescope (an SKA pathfinder facility), and the SKA precursor projects of MeerKAT and ASKAP. As the SKA project moves through the detailed design, pre-construction, construction, and operational stages, industry will play a crucial role in the development, design, delivery and through-life support of the technologies and infrastructure.

It is therefore vital that industrial parties and other SKA stakeholders are kept abreast of the opportunities and contractual timelines to allow potential industry partners to align their planning and capability development and position global industry to provide 'best value' solutions.

Industry participation with the SKA is already occurring through strategic positioning (e.g. early interactions and contact identified in SKA's Industry Contact Register), collaborative development work (including liaison with Member country industry consortia), and paid/unpaid involvement at the pre-construction phase. Involvement may be direct with the SKAO, or via a member country procurement pathway.

Participation is anticipated with a variety of organisations, among them niche R&D companies, followed by increasing engagement through commercial contracts with medium-high volume manufacturers, technology systems vendors, site services and installation firms, and power and data transmission specialists. Engagement is anticipated with larger technology and civil engineering firms, and is also encouraged with smaller local vendors, including industry teaming arrangements that take advantage of supply chains. A measure of success of this strategy will be the extent that industry can deliver the required technologies and services against profitable 'best value' contracts.

This Industry Engagement Strategy (IES) spans the SKA project technology and infrastructure needs from now to around 2018, covering the period when the SKA project will invite industry involvement in procurements valued in the vicinity of €400 million. SKA_1 construction (2018-) has a notional budget of €650 million (2007), and SKA_2 construction (2022-) will be procuring goods and services in the order of €1.5 to €2.5 billion (2007).

The Project Office of the SKA Organisation (hereafter called 'the SKA Office'), and its associated international consortia programs, welcomes interest from existing and potential industry partners.

3 The Square Kilometre Array (SKA) Project

Advances in astronomy over the past decades have brought the international science community to the verge of charting a complete history of the Universe. To achieve this goal, the global community is pooling resources and expertise to design and construct powerful telescopes that will probe the entire electromagnetic spectrum.

The SKA will be one of these instruments; an ultrasensitive radio telescope with a collecting area of up to a million square meters, purpose-built to further the understanding of the most important phenomena in the Universe. Over the next few years, the SKA project will transition from a formative concept to a fully operational instrument (SKA_1) approximating 10% of the proposed full SKA_2 instrument. (See Table 1).

The SKA_1 Observatory will comprise two components. One will be in the Karoo region of South Africa, with 200 dishes, incorporating the MeerKAT SKA precursor and equipped with single pixel feeds, and with a frequency range from 350 MHz to 14 GHz. The other will be a sparse aperture low frequency array (with 130,000 dipole antennas) covering 50-350 MHz built at the Murchison Radio astronomy Observatory (MRO) site in Western Australia, home of CSIRO's ASKAP SKA precursor telescope, and the Murchison Widefield Array (MWA) SKA precursor - a low-frequency radio telescope operating between 80 and 300 MHz. The MWA was developed by an international collaboration, including partners from Australia, India, New Zealand, and the United States.

Coming later, SKA_2 will be a much larger array of coherently connected antennas spread over a continental scale, with an aggregate antenna collecting area of up to $10^6 m^2$ at the longest wavelengths. A key scientific opportunity is to exploit the wide field-of-view (FoV) mid-frequency aperture arrays and/or PAF receptors to carry out fast, sensitive observations of the sky over large areas (surveys), enabled by the most up-to-date signal-processing technology available. Designed with a baseline frequency range of 50 MHz to 14 GHz, the SKA_2 will eventually produce images and other data over wavelengths from around 4.3 metres (70 MHz) to 3 centimetres. In preparation for this, a technology development programme for the future PAF programme will form part of the SKA_1 scope.

As it evolves, the SKA will give astronomers insight into the formation and evolution of the first stars and galaxies after the Big Bang, the role of cosmic magnetism, the nature of gravity, and possibly even life beyond Earth. Unquestionably, the SKA will make more discoveries than we can imagine.

The key applications and science areas for the **SKA_1** are;

- Neutral hydrogen in the Universe from the Epoch of Re-ionisation to now;
- Pulsars, general relativity, and gravitational waves.

SKA_2 extends the key applications and science goals, to include;

- Determining the large-scale properties of the Universe: the amount, distribution, and nature of its matter and energy, its age, and the history of its expansion;
- Study of the dawn of the modern Universe, when the first stars and galaxies formed;
- The formation of stars and their planetary systems, and the birth and evolution of giant and terrestrial planets (the 'cradle of life' questions);

Table 1: *Top level project timeline (indicative) for the SKA*

Technical	
2008 - 2012	Telescope system concept design (SPDO phase)
2013 - 2018	Detailed design (pre construction phase)
2018-2019	Procurement and contracting phase
2019 – 2023	Phase 1 (SKA_1) construction
2019 - 2022	Phase 2 (SKA_2) detailed design
2022 - >	Start science operations with phase 1
2026 - >	Start science operations with phase 2
Milestones	
Early 2012	Establish SKA organisation as a legal entity (SKAO)
Early-mid 2012	SKA_1 Site selection
Late 2012	Establish the pre-construction SKA Office at Jodrell Bank, UK
2018	Establish Inter Governmental Organisation (IGO)
2019	SKA Phase 1 construction contracts prepared
2023	SKA Phase 1 complete.

(See also Appendix A)

4 The SKA Organisation, Membership, and the SKA Office

The SKA project was born global, with SKA Consortia originally established in Europe, Australia, South Africa, Canada, and USA, supported by institutions from India, China, Japan, and Korea. In 2007, the SKA Program Development Office (SPDO) was formed as the technology research, concept design, cost investigation, industry engagement planning, and outreach arm of the SKA project.
In April 2011, nine national governmental and research organisations established a Founding Board for the SKA project. Australia, China, France, Germany, Italy, the Netherlands, New Zealand, South Africa, and the UK agreed to work together to fund the Pre-Construction phase of the SKA project, and new headquarters at the Jodrell Bank Observatory near Manchester (UK).

In December 2011, the SKA Organisation, a UK registered, independent not-for-profit company limited by guarantee was established to formalise relationships between international partners and centralise the leadership of the project. The founding full Members were Australia, China, Italy, the Netherlands, New Zealand, South Africa and the UK. Germany, Canada, India, and Sweden subsequently became Members, although Germany has since withdrawn from official membership.

The SKA Organisation (SKAO) is growing rapidly, and leading the work of the international partners on the design of the telescope. Professor Phil Diamond is the current Director-General.

The SKA organisation top level governance structure is shown in Fig. 1. The current Board of Directors and SKA Member country organisations can be found here http://www.skatelescope.org/the-organisation/board-directors/

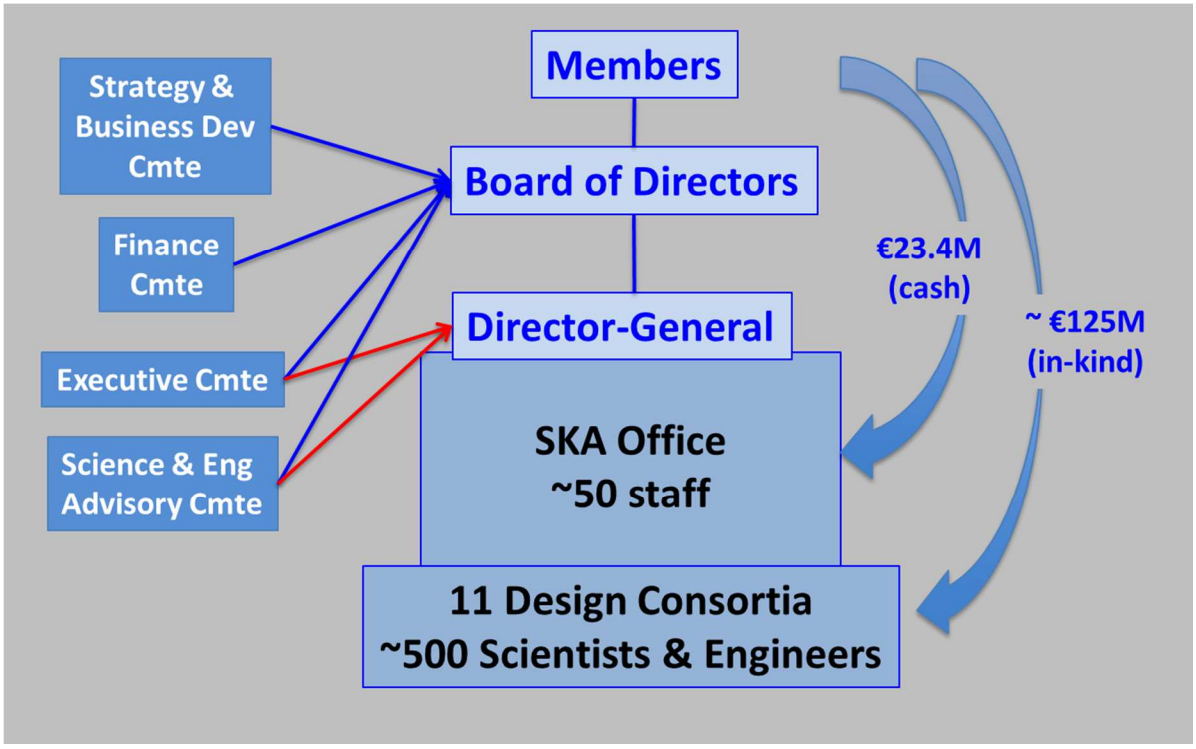

Figure 1: *The SKA Organisation governance structure.*

The realisation of the SKA instrument has begun with a pre-construction phase (2013-2017) leading to the construction of Phase 1 SKA (SKA_1). This effort will be managed by the SKA Office (see below) and delivered in collaboration with Work Package Consortia (WPC) from within the Member countries of the SKA Organisation, in collaboration with their regional industry partners. This phase is described in the SKA Pre-construction Project Execution Plan (PEP). See Appendix B – Stage 1 & stage 2 steps.

The SKA Office controls overall project management, under the leadership of the SKA Director-General, and Head of Project. Domain specialists under the SKA Architect, specialist systems engineers under a Chief Systems Engineer, and Engineering Project Managers, are the core groups for SKA project realisation. These are complemented by a Science Group, Communications, administrative and legal departments, and a Policy Group with oversight of industry engagement and procurement.

The Engineering Project Managers and System Engineers have the responsibility for the successful development and eventual delivery of all aspects of the subsystems in terms of schedule, cost, quality and performance. They will oversee the execution and management aspects of the work carried out by the WPCs, and collect and integrate project management information from the WPCs into the overall project. Regular project reviews at both system and subsystem levels are performed.

5 Industry involvement profile

This Industry Engagement Strategy establishes a framework that sets out the challenges and opportunities of the SKA project, focusing on engagement and practical participation with Work Package Consortia and industry leading to construction of SKA_1. The Strategy describes the aim of the SKA Office to communicate opportunities to industry in an effective manner, and thus encourage effective industrial relationships at the global level. Frameworks are suggested for longer term industry capability development to encourage research and development (R&D) and specific

innovation in SKA-related areas. The principal technical domains embraced by the SKA project are shown in Table 2.

Table 2: *SKA Domains with potential for industry involvement*

Broadband, active, phased arrays for aperture and focal plane applications
Decade bandwidth feed antennas for dishes
High dynamic range (>70 dB) image formation using sparsely-sampled Fourier plane data
High-speed (Tb/s) digital fibre optic links for distance regimes extending from 100 m to >3000 km
High-speed digital signal processing engines (Pb/s) and ultra-fast supercomputing (at exaflop rates)
Low-cost, high-speed (Gs/s) analogue to digital converters
Low-cost, mass manufacturing of small to medium diameter dishes
Low-noise, highly integrated, receivers for both cryogenic and uncooled applications
Outreach and public education
Power design and Engineering
Project Management
Radio-frequency interference mitigation using coherent and incoherent techniques
Site studies and infrastructure engineering
SKA scheduling, operations and maintenance models
Software engineering for robust, intelligent, array control and data processing
System Engineering

Figure 2. (below) shows the potential opportunities for industry expressed in relation to the SKA signal path.

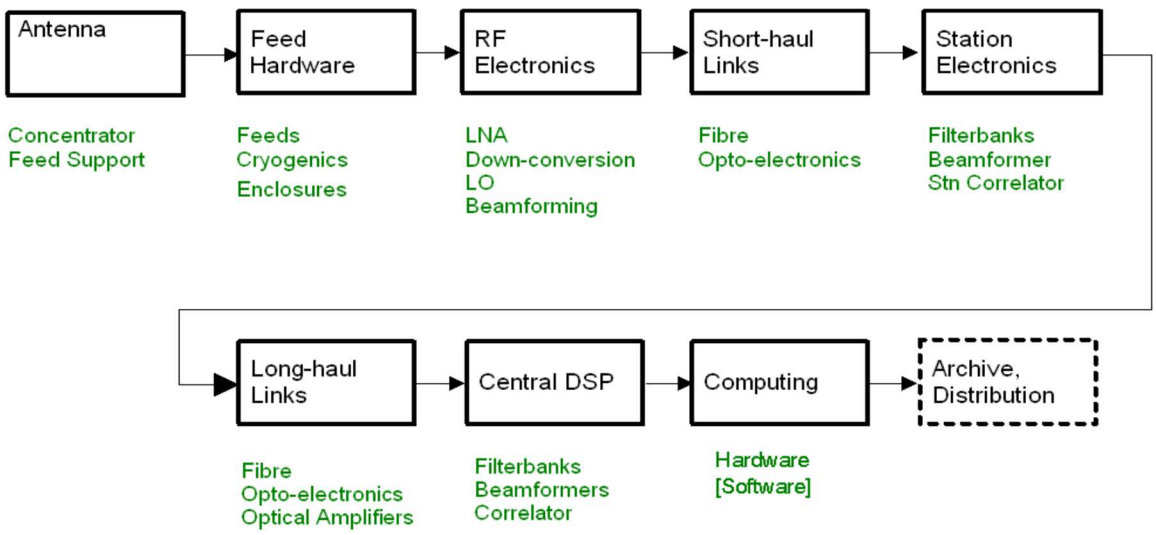

Figure 2: *Areas of potential industry opportunity in relation to the SKA signal path.*

In the longer term, the SKA Organisation is keen to see broader industry benefits flowing from involvement with the project, for example:

- The opportunity to grow and hone the creative energies of the best professionals in an imaginative project whose aim is no less than to chart the history of the Universe;
- The ability to develop and perfect leading-edge techniques and products in a very demanding application and to interact with highly technologically sophisticated users;
- The ability to generate and share information with other R&D partners – both institutional and industrial – in a benign and commercially non-threatening environment;
- The visibility flowing from association with an innovative, high profile, international mega-science project; and
- The potential for early involvement contracts with tangible payback in a funded, cutting-edge project spanning a wide range of infrastructure, engineering and computing disciplines.

SKA industry engagement is anticipated to fall broadly into three areas, characterised as; **strategic positioning** (teaming, market and industry exploitation, specialist exchanges); **industry development** (business creation, new sectors, IP generation, supply chain integration); **industry participation**; (contracts awarded, jobs and skills maintained, industry collaboration with academia).

5.1 Supplier profile

The SKA Office has no preconceived notions as to the size, location, structure, or governance of potential suppliers to the project. However, without contradicting any specific requirements expressed in procurement materials or documents, the following may be a helpful guide to organisational profile characteristics that reflect the nature of the project;

- **Reputation.** The SKA will require technologies, goods and services from dependable suppliers who are likely to have a demonstrated track record of working successfully with highly innovative partners;
- **Flexibility.** The nature of the SKA instrument, its 'greenfield' location, and cutting edge design, means that not all development, integration, and construction problems will have been entirely solved at contract award time. Suppliers with experience in this environment will realise the need to factor in a degree of flexibility and tolerance when engaging with the SKA project, and avoid a 'contract variations claim' stance;
- **Approach to risk.** While there is certainly technological risk to the project, the astronomical community has deep understanding and experience of the effort required at the test and commissioning stage of the SKA. The pre-construction phase especially is highly collaborative between suppliers, and SKA engineers and scientists, and software specialists. Potential suppliers should understand that final performance is achieved only after extensive configuration testing and systems integration work, and appropriate levels of contingency for unknown factors should also be considered;
- **System Reliability.** It is expected that some suppliers will have experience in the defence sector, reflecting its high reliance on cutting edge electronics and software. It should be realised though, that while the SKA is no less demanding in terms of technology, individual component failure leading to a fraction of the instrument being unserviceable for a period is possibly acceptable. Potential suppliers should clearly understand the reliability requirements and match their offer to the specific project application; and
- **Extended relationships.** Development and construction of the SKA will explore and reveal many new applications and know-how across fields as diverse as high-capacity data transport, remote power management, Radio Frequency Interference (RFI) mitigation, 'systems of

systems' control and behaviour, and even human management challenges. Organisations are encouraged to look beyond supply contracts and seriously consider the potential for other (non-financial) project involvement benefits including exploitation of IP in adjacent markets, organisational learning, and capability expansion.

6 Broader Benefits of Engagement with the SKA Project

Apart from delivering the performance to meet the science goals of the instrument, the SKA project has the potential to seed direct social and economical benefits, including industry benefits.

The world's radio astronomy infrastructure, of which the SKA will form a key element, supports the research of thousands of professional and student radio astronomers and astrophysicists employed in universities and other research institutions around the globe. Many student scientists and engineers go on to pursue discoveries and careers in allied industry sectors, often employing techniques and technologies derived from astronomical research.

Participation in the SKA through involvement in Work Package Consortia (WPC) has the potential to showcase regional industry capability. As a next generation telescope, the SKA requires technological innovation and complex system integration on a challenging scale. The project has already drawn significantly on the expertise of industry in the pre-cursor (pathfinder telescope) countries, as well as from multi-national corporations.

Traditionally, technologies developed for astronomy have been taken up by diverse range of industries including ICT, medicine, ecology, and system management. It is anticipated that there will be similar transfer of new technology and new applications from both the pre-cursors, and the SKA itself. Solutions for the non-astronomy challenges for the SKA (sensors, power supply, remote access, and remote operations of high tech infrastructure) will also have global applications.

Skills development and skills transfer is anticipated through contract works, training, testing, commissioning and handover, embedding of personnel within SKA Member country institutes or contractors involved in the WPCs. Skills transfer may form a mandatory or optional part of an SKA procurement.

Industry working with the SKA Organisation may seek approval to exploit pathways to 'spin-off' benefits and legacy capability that offers social, technical, and economic benefits beyond the global SKA program. This may be manifested through new infrastructure, new jobs, exploitation of Intellectual Property, new indigenous capability, and creation of new supply chains.

7 Assumptions, Framework, and Principles of Industry Engagement

As the SKA Office becomes further established, principles, policies and procedures covering the management of procurement processes will be developed and implemented in accordance with Member expectations, policy development committees, and Board approval. These processes will be underpinned by substantial studies undertaken during the SPDO era, the GO-SKA team efforts, and broad expert consultant guidance drawn from industry and like-projects.

The Work Package Consortia (WPC) represents the main reservoir of detailed domain knowledge in the project. The requirements and specifications for the SKA and sub-systems will be developed

collaboratively with the WPCs through the pre-construction phase; the SKA Office being the central authority for procurement standards, policy and design decisions.

Initially, much of the industrial involvement will be as part of Work Packages taken on by the WPC, in which case the primary relationship with industry will be with the consortia rather than the SKA Office directly. However some minor contracts to industry may continue to be managed directly from the SKA Office. As the project transitions through SKA_1 procurement to the SKA_1 construction phase, industry opportunities will emerge on a grander scale. Note that involvement in the pre-construction phase does not necessarily give or imply an advantage when bidding for the construction phase.

The size and complexity of the SKA means that an industry culture in managing and costing the project is essential, while retaining the domain knowledge and experience of the WPCs. The principles of industry engagement, whether directly with the SKA Office or via Members, is to be consistent with the following;

- The design, construction and commissioning of the SKA will herald a significant step in the technology and performance of radio telescopes. Consequently, specifications are demanding, and only the best quality and reliability will be acceptable. To reach this standard, procurement processes will scan globally for suppliers best able to meet the rigorous demands of the instrument;
- The SKA Office procurement function may undertake global industry 'scouting' work and member country surveys, and use this information to inform a 'smart' procurement approach for greater efficiency and effectiveness and assist in understanding the capability landscape for procurement 'balancing';
- Requirements, as they progress from general performance aspirations through to specifications, will be appropriately communicated, and developed with the benefit of industry consultation. It is likely that specifications will be a mix of 'build-to-print', and performance specifications, as appropriate. Requirements will be realistic in terms of commercial risk, and incorporate appropriate milestones and payment arrangements;
- Procurement documents will be made available to potential bidders/suppliers at the same time and with reasonable time frames for a response, in accordance with the complexity of the specification;
- Received tenders for each procurement will be assessed on a fair and equitable basis. The cost of responding to tenders will be kept as low as possible, in line with industry best practice;
- Where it is considered necessary, feasible and is permitted, briefings will be held and/or information will be made available in relation to specific tenders, as well as sector-specific information on coming tenders;
- Procurement activities, whether by competitive open tender, restricted tender, or strategic alliance, will be managed professionally, ethically, and efficiently, operate under a procurement policy, and must withstand proper scrutiny;
- The SKA Office may collaborate and consult on a 'without prejudice' basis with industry, and may seek general advice concerning the manner of requirements setting, programmatic effectiveness, and specific contractual performance. Such activities will be structured so as to avoid 'lock-out' of any future vendor to the project;
- The SKA Organisation will pursue a 'best-value' approach to the market, and will demonstrate integrity and fairness in negotiating contractual matters with national and international entities, in accordance with approved procurement rules and policy. SKA Office procurement policy will permit techniques such as balancing and *Fair Work Return* to fulfil global goals for collaborative return on investment, and capacity building; and
- Industry suppliers (whether part of a WPC or not) will conduct their dealings with the SKA Office with the highest standards of integrity and commercial behaviour, recognising that the

SKA project is characterised by a trusted collaboration of global science organisations, led by a not-for-profit entity, and in the future, an intergovernmental organisation.

Industrial liaison, beyond the procurement interaction, is planned to continue into the construction phase of the project. The role of the SKA Office Industry Liaison Officer will focus on sustainable industrial engagement, and communications support between the project and industrial agencies and groups.

8 Assumptions, Principles, and Process for Procurement

The SKA Organisation's approach to procurement is framed by the following Board approved principles:

- Openness, competitiveness and transparency, noting the aspiration for Member States to receive some level of return for their investment.

- The procurement strategy may adopt innovative approaches for procurements e.g. strategic alliances where best value and lower risk can be realised.

- That such principles should be applied to both cash and in-kind contributions.

- That there is a form of centralised procurement process managed by the SKAO, with the SKAO also having responsibility for the valuation of in-kind contributions.

These principles are underpinned by a 'best value' acquisition policy, with primary consideration given to project mission success and performance. Factors will include reliability, supportability, ease of integration, purchase risk, and total acquisition cost. The points below frame the general determination of whether a proposal provides genuine 'best-value':

- the capability of the supplier to deliver to the agreed terms, preferably assessed on the basis of past contractual performance;
- the extent to which the product on offer meets or exceeds the specifications sought;
- the flexibility to adapt to possible change over the lifecycle of the product or service, including the extent to which it can be evolved to meet future capability needs;
- financial considerations including all relevant direct and indirect benefits and costs and risks over the whole procurement cycle, and beyond in the case of lifetime costs;
- evaluation of the risks associated with the alternative choices; and
- the cost-benefits of an accelerated delivery schedule.

The SKA procurement approach will generally concentrate on what is required in terms of the final capability or performance, and not on the detail of the product or service beyond obvious limits of physical size or power draw, etc. However for certain SKA components, systems and services, the more traditional approach (build-to-print) will be applicable, e.g. where various suppliers must each deliver numbers of identical product, or where the detail of the physical design is paramount.

This section presents a description of the *anticipated* procurement/work assignment process to be employed in the SKA project. It starts by outlining various base assumptions for the initial conditions in the project, and builds on the high-level principles (see Section 7) agreed by the Board to establish

a series of steps that can be used for the full range of likely procurement scenarios necessary to accommodate the likely cash and in-kind contribution environment the project will operate in.[1]

8.1 Introduction to SKA procurement

Construction of SKA will require an international effort comprising resources provided to the project in a variety of forms. It is envisaged that the primary forms will be through:

- Centrally-funded activities, where a procurement action is undertaken using common project funds; and

- In-kind contributions where responsibility for completion of an activity or provision of a deliverable is assigned to a contributor, who supports the costs of their work locally.

In both cases, the SKA Office Head of Procurement will be responsible for:

- Administering the procurement and work assignment processes, including determining the suitability of elements of the SKA Programme to be undertaken as centrally-funded procurements or as in-kind contributions;
- Undertaking pre-qualification processes necessary for the centrally funded procurement or work assignment;
- Undertaking detailed negotiations on the controls (product assurance, project management, system engineering) for in-kind contributions;
- All aspects of negotiation on details of the tasks and apportionment of work, risk and financial matters; and
- The valuation of in-kind contributions according to principles agreed by the SKA Board

After SKA_1 construction, similar assumptions may remain in play for the operations era, but this aspect is not discussed further in this document.

8.2 Return on Investment and *Fair Work Return*

The SKA Board's requirement that the construction procurement policy be guided by the principle of *Fair Work Return*, which is interpreted to mean that Members expect an industrial contractual return for their investment in the project. In this environment, the intent is for a broad balance to be achieved where the agreed value of the in-kind contributions from a country is in similar proportion to the % resource share being provided by a Member to the project. This *Fair Work Return* approach must not overshadow the concept of 'best value'. While balancing RoI, industrial and/or institutional contracted work should be on the basis of most efficient spend of finite resources, rather than a priority on member country returns.

Assuming that a combination of contribution types will be required in the definition of a Members' contribution share, a mechanism is required that will enable a Member to demonstrate their return across the project, resulting from both cash and in-kind contributions (including nationally contracted industrial participation). The overall aim is to deliver a process that will permit the assignment of

[1] Note that the SKA Board is currently working towards establishment of a dedicated International Organisation (IO) through the completion of an International Agreement between member governments. In this document, it is assumed that the IO will be in operation by the time required to prepare for SKA1 construction.

responsibility for work, through contracts, either centrally procured or via offers of locally-funded, but centrally coordinated, in-kind deliverables.

8.3 Process outline

Given the framework and overall context for construction phase procurement in the SKA, it becomes clear that contracting with industry will occur via the following pathways:

1. Contracts awarded centrally from the SKA organisation HQ *(i.e. considered not suitable for in-kind contribution);*

2. Contracts awarded via direct procurement activity in the member country *(i.e. potentially suitable for in-kind contribution;*

3. Contracts awarded by a Work Package Consortia (WPC) as part of a collaboration *(i.e. effectively an in-kind contribution)*

A detailed set of preparatory steps will establish an overall procurement plan, based on an agreed 'Cost Book' describing activities and exploratory activity to understand intentions and areas of interest. In pathway #1, the SKA Office will decide on (a) structured competition within Members, (b) open competition within members, (c) global open competition, or (d) approved single (or restricted) source supply.

In pathway #2, the opportunity is offered to member countries as an in-kind contribution, with an Expression of Interest released as (a) structured competition within members, (b) open competition within members, (c) agreed split between Members, or (d) competitive split between Members. In the case of no viable offer received, the opportunity would revert to pathway #1.

In pathway #3, industry may be approached by any WPC as a contributing partner on a commercial basis. These scenarios are illustrated in Figure 3 in a 'model' work package area.

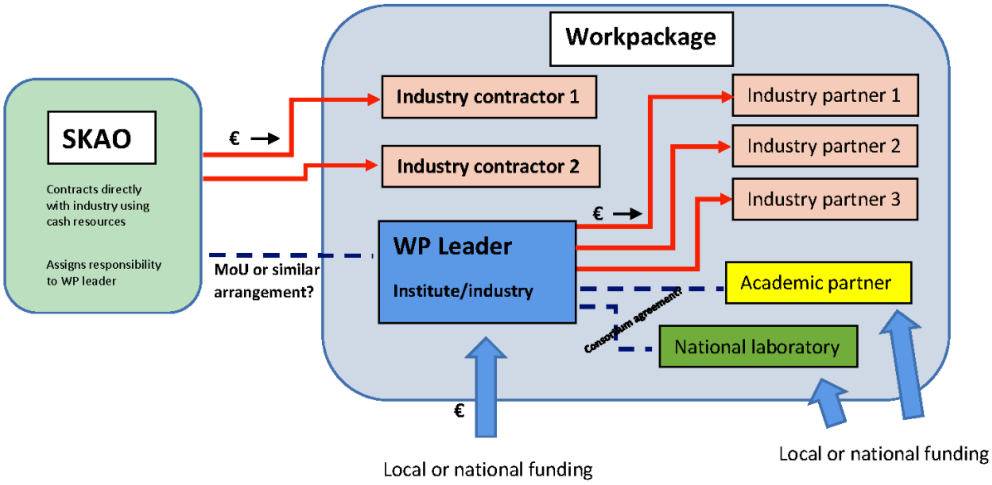

Figure 3: *Pathways for industry contracting to occur.*

Opportunities for industry participation appear in all pathways, either through direct contracting/engagement (pathway #1), or as a commercially engaged supply partner (pathways 2 &

3) – the difference being the point of contact with the SKAO, and its Members. In the case of SKA member countries, Authorised Contact Persons (ACPs) have been established as the principal contact point for business interactions. See https://www.skatelescope.org/opportunities-industry/. The ACPs are officially nominated by their Member country as the approved representative in matters concerning Member country industry capability, local industry consortia, national trade frameworks, and innovation networks. The ACPs are an important function in their Member countries, and particularly for industry, given their role in forging and maintaining links between national stakeholders, and the SKAO.

All stakeholders acknowledge the need for a process which is as open and transparent as possible. However, the reality is that in order to make the project work, some flexibility must be possible in the way the process works. This flexibility must include the ability to iterate contributions to cover gaps and to balance low and high value work as an element of ensuring equitable opportunity and return for all Members.

The relationships among the SKA Office, Work Package Consortia, and industry are shown in Figure 3, and their roles and relationships are described in more detail below.

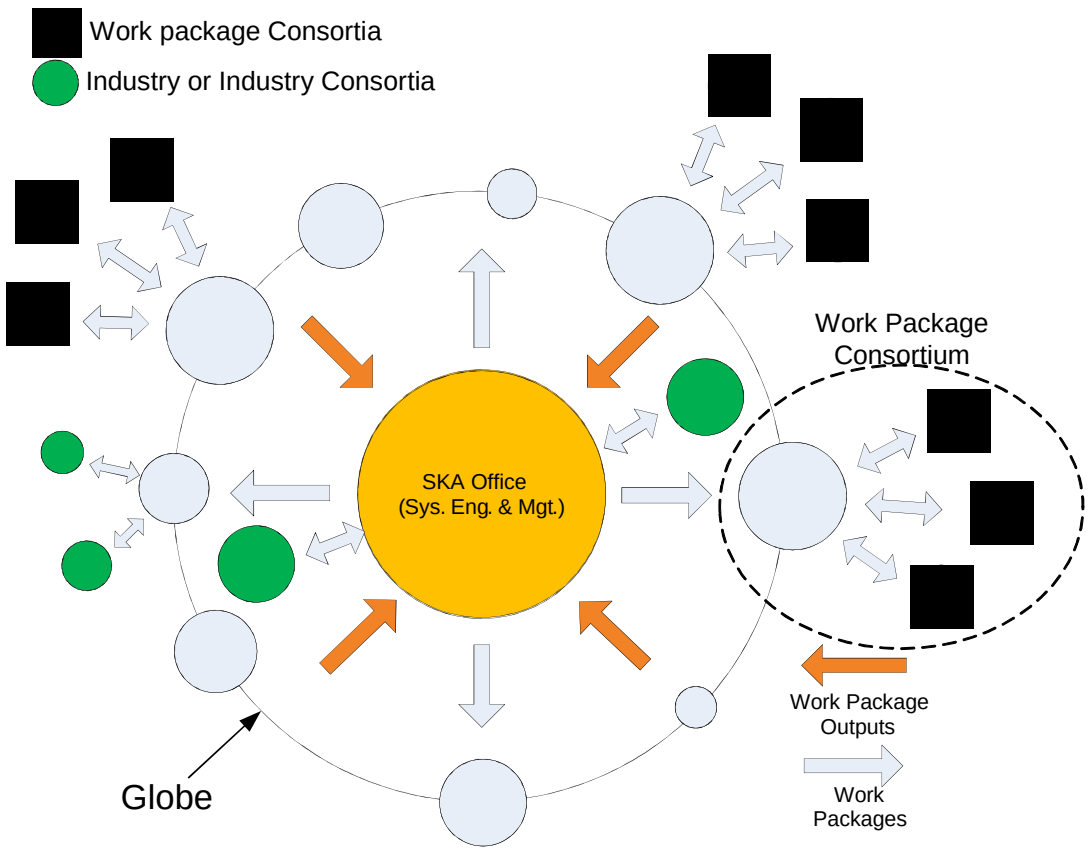

Figure 4: *The relationships between the SKA Office, WPC, and Industry.*

8.4 Evaluation of offers

Except for very low value procurements, the compliance with the technical, managerial, schedule and quality requirements for competitive procurements will be evaluated independently from the contractual compliance, as well as from the knowledge of the prices, to arrive at a 'best value' offer.

For the purpose of evaluating compliance, both technical and contractual, SKA will set:

- "knock-out" criteria which are disclosed in the CFT documentation: failure from a bidder to comply with a single one of these criteria is a cause for elimination;
- Other, non eliminatory criteria, which are also disclosed in the CFT: the assessment of each tender against each such criterion constitutes the basis for establishing overall compliance or not.

The weighting factors to perform the consolidation are however not disclosed. Only when tender offers /quotations demonstrate compliance with specifications, *and* show clear overall best-value, are then awarded to the company which has submitted the lowest price.

9 Communication of Opportunities for the overall SKA Project

The SKA Organisation's main communications are via:

- Regular updates posted on the SKA Organisation website (www.skatelescope.org);
- Promotion through newsletters, and media releases;
- Posting of public tenders on appropriate websites; and
- Direct communications (telephone, email, etc.)

In addition, the SKA Organisation's may utilise other channels from time to time, including:

- Provision of information and facilitation of project briefings to industry;
- Early release of *indicative* technical specifications to permit industry to begin research and development of detailed proposals;
- Support of meetings and workshops with industry groups, for example in supporting National Days in Member countries;
- General communication via this Industry Engagement Strategy.

Potential suppliers can become aware of SKA supply opportunities through;

- Prior involvement with one or more SKA stakeholders;
- Attendance at a local, or SKA Office organised, briefing or conference;
- Announcements in an SKA newsletter or website material;
- Active seeking of markets by industry Business Development personnel;
- Notification from a public database of SKA (and pre-cursor) vendors;
- Via any SKA Global Capability Assessment process;
- Public advertising of business opportunities (EoI, RfP, etc);
- Direct approach by an SKA stakeholder, Member country agency, or person;
- Membership of an industry group, e.g. SKA industry consortium; and
- Encouragement by Government agencies.

10 Intellectual Property

As a large global, cutting-edge science enterprise, the SKA program strongly encourages innovation in order to fulfil its mission of developing, constructing, and operating a 'next-generation' radio telescope through cooperation among the SKA stakeholders. The SKA Office has issued an *"SKA Intellectual Property Policy"* which continues the commitments of the original SKA Consortia to share background, foreground, and third-party IP within a defined framework. This is available here: https://www.skatelescope.org/wp-content/uploads/2011/03/SKA-GOV.POL-SKO-POL-001_IPpolicyRevX.pdf

11 Industry Engagement Risk Management

The SKA Organisation will adopt a prudent approach to industry engagement risk mitigation, including adoption of the risk reduction tactics outlined below:

- Well drafted, and legally clear, contracts;
- Adequate resources assigned to contract management;
- Competence within the SKA Office;
- Context, complexities and dependencies of contracts well defined and understood;
- Sufficient testing or other validation of supplier assumptions or assertions;
- Clear authorities or responsibilities relating to commercial decisions;
- Proper performance measurement or benchmarking by the SKA organisation;
- Appropriate flexibility and/or innovation in procurement in order to optimise value-for-money outcomes and to ensure that supplied goods and services comply with requirements;
- Proper monitoring and management of retained risks, and procurement barriers (statutory, political and commercial);
- Sensitivity to competent supplier capacity, and scope creep beyond capability; and
- Awareness of financial transactions environment, and potential force majeure.

For a strongly collaborative project such as the SKA, there is a high likelihood of contact and dialogue between project personnel and industry. Nevertheless policies must be observed and methodologies adopted by all parties to ensure that any information exchange with industry precludes any real or perceived commercial advantage, and thus restrict industry participation (a situation also known as 'lock-out').

For clarity, SKAO procurement will comply with EU Law, while (in-kind) procurement conducted by agencies in other jurisdictions (e.g. South Africa, Australia, etc.) is expected to comply with their national policies and legislation. In the future, the SKA International Treaty Organisation (ITO) intends to have its own procurement structure which would similarly avoid the lockout problem in cases where the SKA ITO undertakes the contracting action.

SKAO takes confidence from examples in other large scientific infrastructure projects (e.g. LOFAR, ALMA, GMT, etc.) show that it is possible to operate properly within official procurement rules and still do what is technically, scientifically, and commercially necessary.
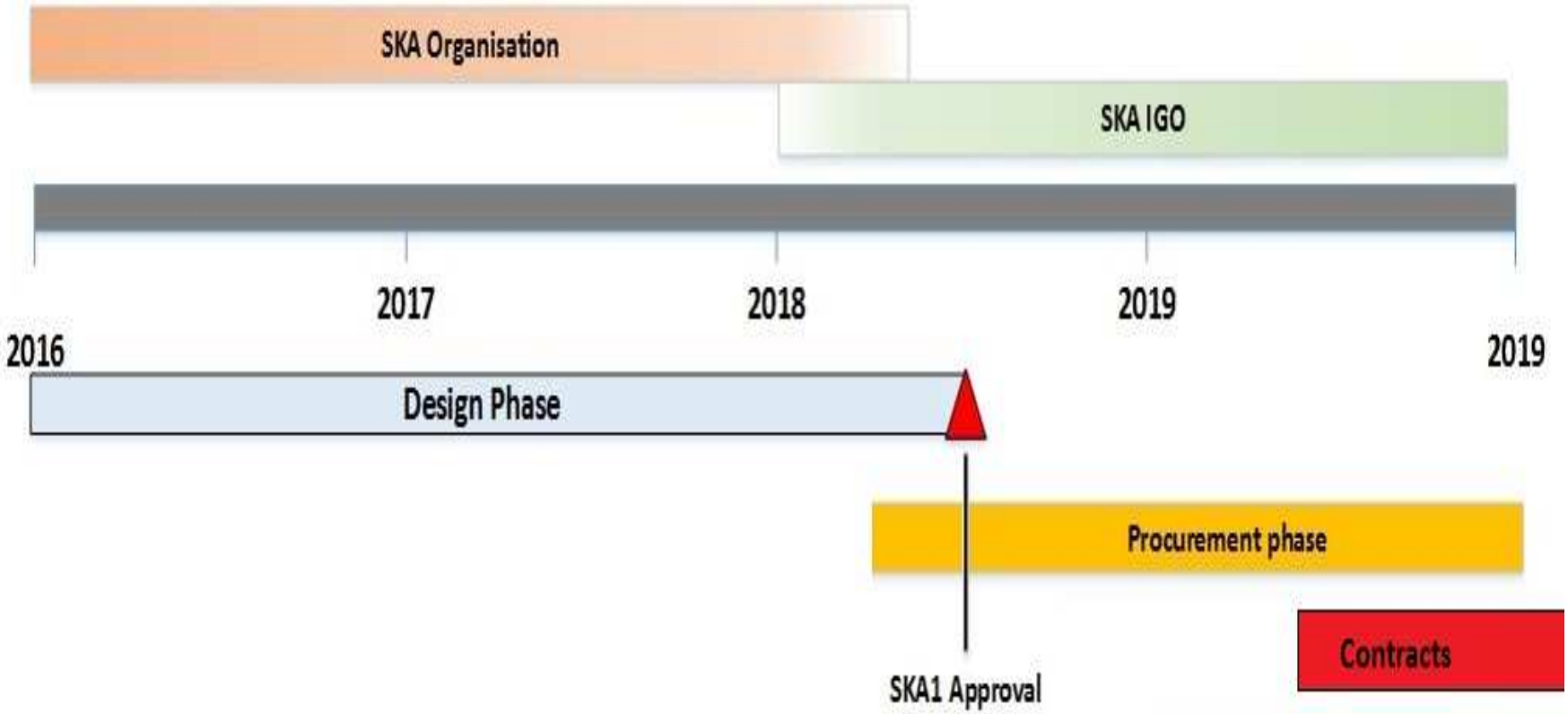
Appendix A – Indicative time-chart for the SKA Project